Questions:

What is superposition?
What is a dependent source?

Mesh/Node again

a)

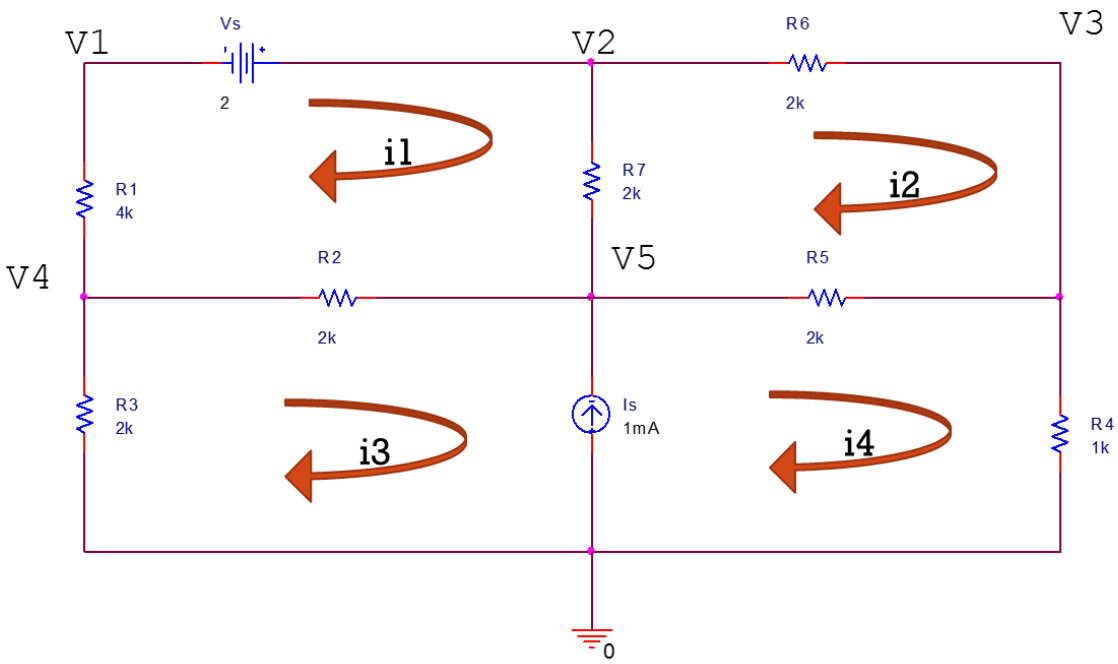

1. Using the labeled nodes and mesh loops, determine the linear equations for both methods.
2. Solve using both mesh and node equations
   (Answer: V1= -0.57V, V2= 1.42V, V3= 0.74V, V4= 0.51V, V5= 1.56V, V6=0V)
   (Answer: i1=0.27mA, i2=0.34mA, i3=-0.25mA, i4=0.75mA)
3. Determine the voltage across R7
   (Answer: VR7=0.13V)

b)

Superposition

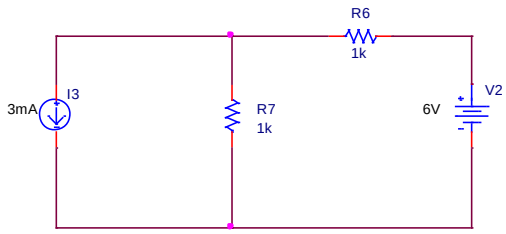

1. Draw the superposition circuit for each source
2. Use superposition to determine the voltage across R7 (Answer: VTOT=Vv2+VI3=-2V)

c)

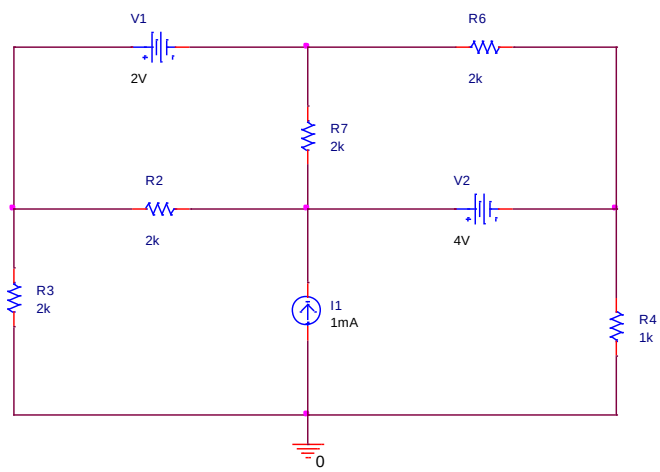

1. Apply superposition to the circuit above to find VR7
   (Answer:VTOT=VV1+VV2+ VI1= 0.91 – 1.81 -0.182 = -1.078 V)

Dependent sources

d)

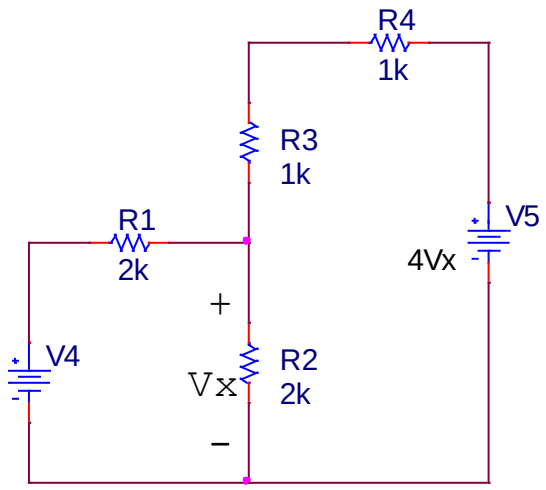

1. Determine the voltage V5 when V4 = 1 [V]
2. Determine the voltage V5 when V4 = 2 [V]
3. Determine the voltage V5 when V4 = 4 [V]