Silly bridge circuit

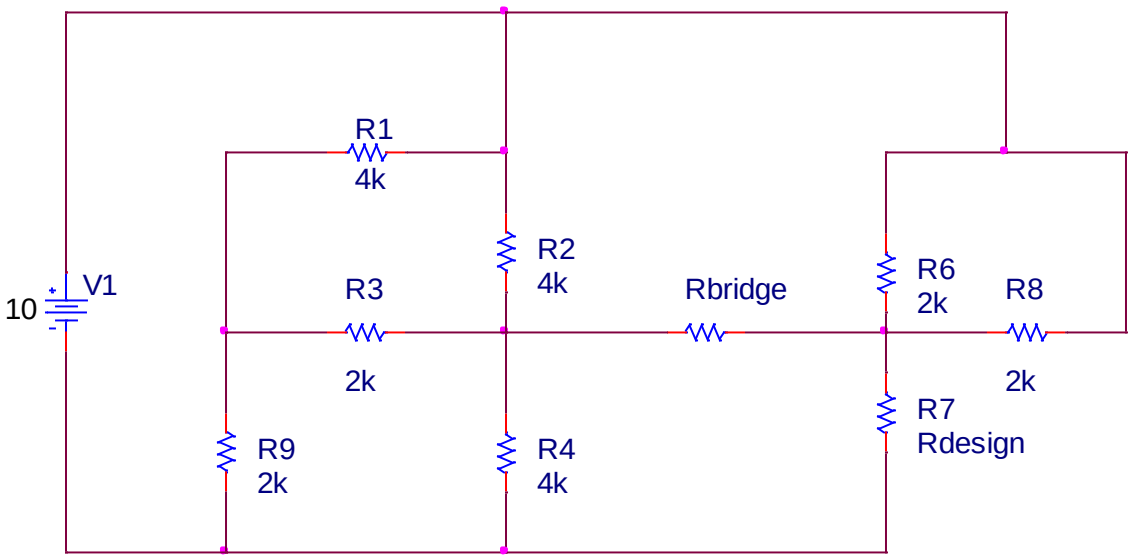

a) Find Rdesign such that no current goes through Rbridge (Rdesign = 0.778k)

Source Transformations , Thevenin Circuits, Power Transfer

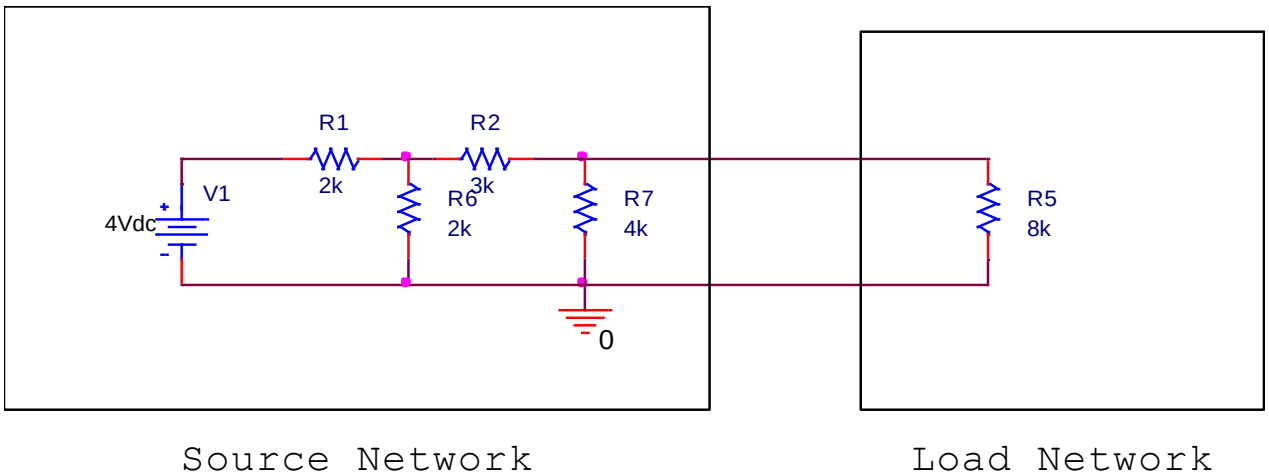

a) Find $V_{opencircuit}$ ($V_{Thevenin}$) (Voc = 1V)
b) Find $I_{shortcircuit}$ (I_{Norton}) (Isc = 0.5mA)
c) Find $R_{Thevenin}$ (RTH = 2kΩ)
d) Is it possible to change R7 such that maximum power is delivered to R5?

Thevenin Equivalence – Dependent Sources

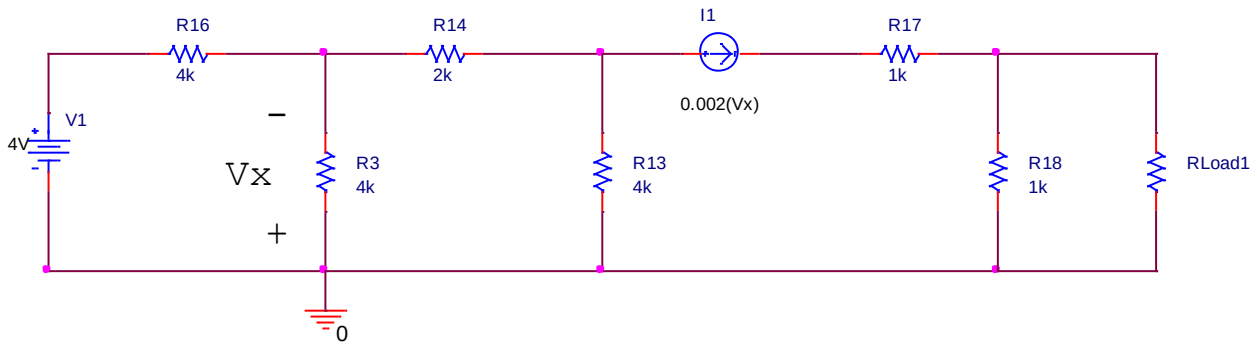

a) Find Vopencircuit (VThevenin) *(Answer Voc = 3V)*
b) Find Ishortcircuit (INorton) *(Answer Isc = 3mA)*
c) Find RThevenin using a test voltage source *(Answer RTH = 1kΩ)*

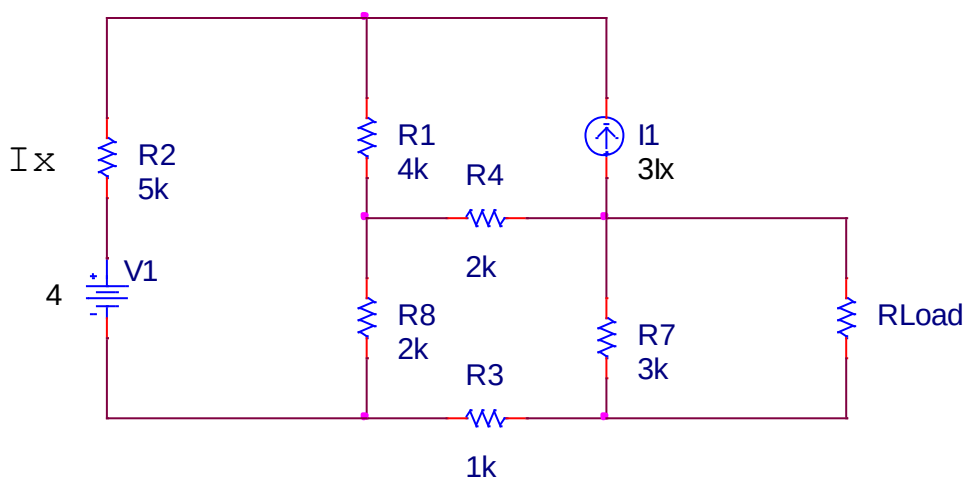

a) Find Vopencircuit (VThevenin) *(Answer Voc = -4V)*
b) Find Ishortcircuit (INorton) *(Answer Isc = -1.52mA)*
c) Find RThevenin using a test voltage source *(Answer RTH = 2.63kΩ)*