Thevenin Equivalence – Dependent sources

a)

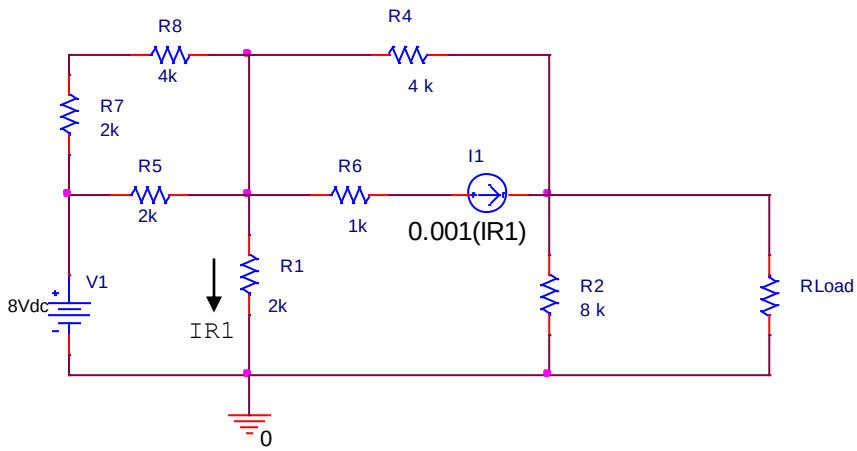

1) Find $V_{opencircuit}$ ($V_{Thevenin}$)
2) Find $I_{shortcircuit}$ (I_{Norton})
3) Find $R_{Thevenin}$ using a test voltage source

b)

Thevenin Equivalence – Dependent Sources using superposition

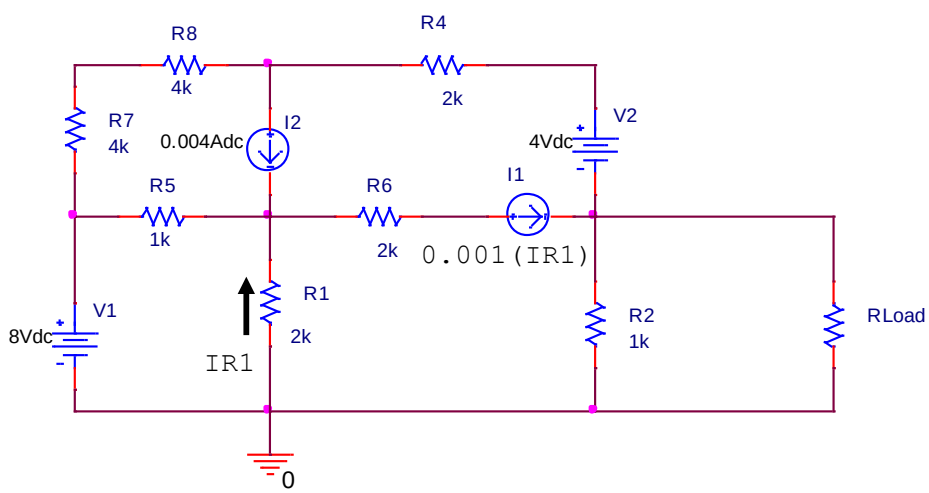

1) Find $V_{open\text{-}circuit} = V_{Thevinin}$ using superposition
2) Find $I_{short\text{-}circuit} = I_{Norton}$ and $R_{Thevenin}$

Amplifiers

c)

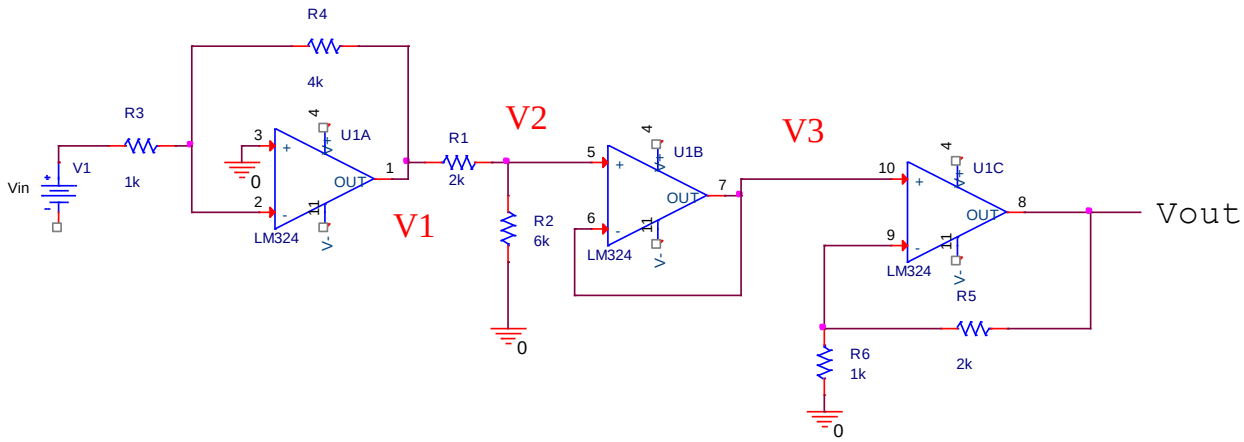

1) Determine Vout in terms of Vin

d)

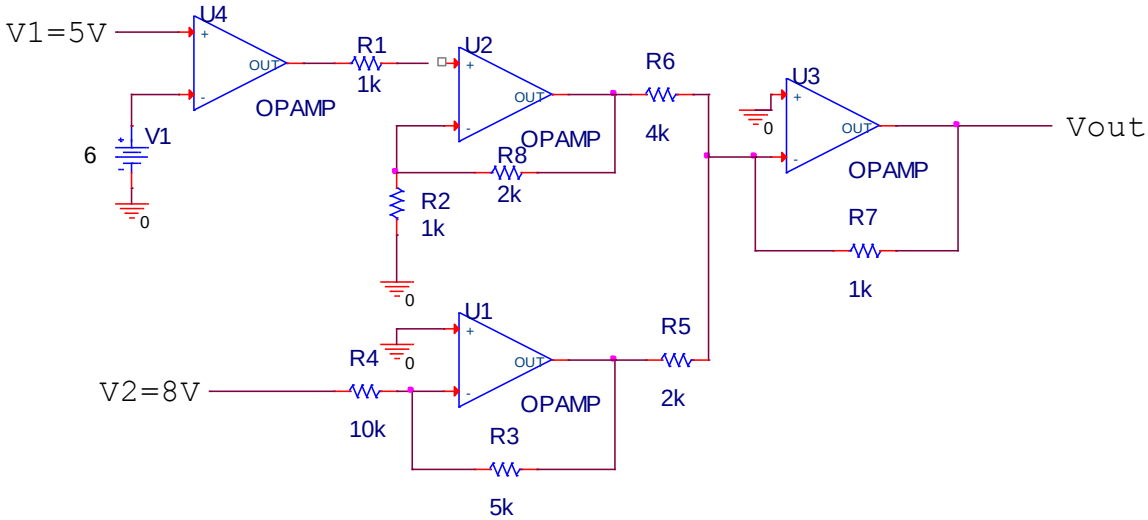

1) For the above circuit, determine the output voltage, Vout. The voltage supplied to the op-amps is 9V and -9V, as appropriate
2) Design a two stage amplifier such that the output of the first stage is $V_1 = -3V_{in}$ and the output of the second stage is $V_{out} = -V_1$