ELECTRIC CIRCUITS
ECSE-2010

Lecture 28

Rensselaer

LECTURE 28 AGENDA

- Other Filters
  - Sallen-Key
  - Butterworth

Rensselaer

SALLEN-KEY LOW PASS

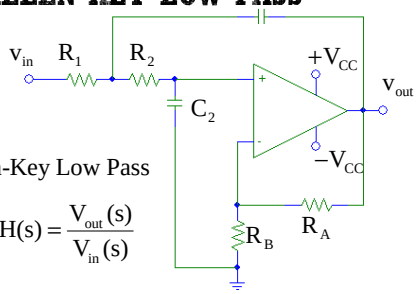

Sallen-Key Low Pass

Find $H(s) = \dfrac{V_{out}(s)}{V_{in}(s)}$

Rensselaer

SALLEN-KEY LOW PASS

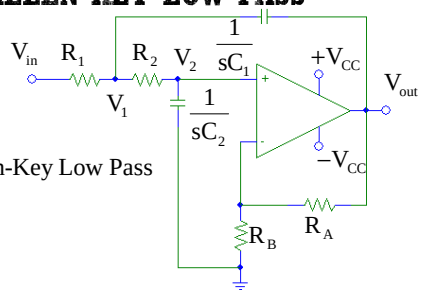

Sallen-Key Low Pass

Rensselaer

SALLEN-KEY LOW PASS

Node Equation at V_1:

$$\frac{V_1 - V_{in}}{R_1} + \frac{V_1 - V_2}{R_2} + \frac{V_1 - V_{out}}{1/sC_1} = 0$$

$$\frac{V_1 - V_2}{R_2} = \frac{V_2}{1/sC_2}$$

$$\Rightarrow V_1 = V_2(1 + R_2C_2s) = V_2R_2C_2\left(s + \frac{1}{R_2C_2}\right)$$

$$= V_2\left(\frac{s+\omega_2}{\omega_2}\right); \quad \omega_2 = \frac{1}{R_2C_2}$$

Rensselaer

SALLEN-KEY LOW PASS

For Op Amp: $V_{out} = \left(1 + \dfrac{R_A}{R_B}\right)V_2 = \mu V_2$

$$\Rightarrow V_2 = \frac{V_{out}}{\mu}$$

$$\Rightarrow V_1 = V_2\left(\frac{s+\omega_2}{\omega_2}\right) = \frac{V_{out}}{\mu}\left(\frac{s+\omega_2}{\omega_2}\right)$$

Now have V_1 and V_2 in terms of V_{out}

Rensselaer

SALLEN-KEY LOW PASS

$$\frac{V_1 - V_{in}}{R_1} + \frac{V_1 - V_2}{R_2} + \frac{V_1 - V_{out}}{1/sC_1} = 0$$

$$\frac{V_{out}}{R_1\mu}\left(\frac{s+\omega_2}{\omega_2}\right) + sC_2\left(\frac{V_{out}}{\mu}\right) + sC_1\left(\frac{V_{out}}{\mu}\right)\left(\frac{s+\omega_2}{\omega_2}\right) - sC_1V_{out} = \frac{V_{in}}{R_1}$$

Rensselaer

SALLEN-KEY LOW PASS

$$V_{out}\left[\left(\frac{s+\omega_2}{\omega_2}\right)\left(\frac{1}{\mu R_1}\right) + \frac{sC_2}{\mu} + \frac{sC_1}{\mu}\left(\frac{s+\omega_2}{\omega_2}\right) - sC_1\right] = \frac{V_{in}}{R_1}$$

$$V_{out}\left[\frac{(s+\omega_2) + \omega_2 R_1C_2 s + R_1C_1 s(s+\omega_2) - R_1C_1\omega_2\mu s}{\mu\omega_2}\right] = V_{in}$$

$$V_{out}\left[s^2 + (\omega_1 + \omega_2 + \omega_{21} - \mu\omega_2)s + \omega_1\omega_2\right] = \mu\omega_1\omega_2 V_{in}$$

$$\boxed{\omega_1 = \frac{1}{R_1C_1};\ \omega_{21} = \frac{1}{R_2C_1};\ \omega_2 = \frac{1}{R_2C_2}}$$

Rensselaer

SALLEN-KEY LOW PASS

$$V_{out}\left[s^2 + (\omega_1 + \omega_2 + \omega_{21} - \mu\omega_2)s + \omega_1\omega_2\right] = \mu\omega_1\omega_2 V_{in}$$

$$H(s) = \frac{V_{out}}{V_{in}} = \frac{\mu\omega_1\omega_2}{s^2 + (\omega_1 + \omega_2 + \omega_{21} - \mu\omega_2)s + \omega_1\omega_2}$$

$$H(s) = \frac{K\omega_0^2}{s^2 + 2\zeta\omega_0 s + \omega_0^2} \qquad \omega_0 = \omega_1\omega_2 = \frac{1}{\sqrt{R_1C_1R_2C_2}}$$

$$K = \mu \qquad 2\zeta = \sqrt{\frac{R_2C_2}{R_1C_1}} + \sqrt{\frac{R_1C_2}{R_2C_1}} + (1-\mu)\sqrt{\frac{R_1C_1}{R_2C_2}}$$

Rensselaer

SALLEN-KEY LOW PASS

$$H(s) = \frac{K\omega_0^2}{s^2 + 2\zeta\omega_0 s + \omega_0^2}$$

$$K = \mu = 1 + \frac{R_A}{R_B} \qquad \omega_0 = \frac{1}{\sqrt{R_1C_1R_2C_2}}$$

$$2\zeta = \sqrt{\frac{R_2C_2}{R_1C_1}} + \sqrt{\frac{R_1C_2}{R_2C_1}} + (1-\mu)\sqrt{\frac{R_1C_1}{R_2C_2}}$$

2nd Order Low Pass Filter

Rensselaer

SALLEN-KEY LOW PASS

If Choose $R_1 = R_2 = R;\ C_1 = C_2 = C$

$$\omega_0 = \frac{1}{RC} \qquad \zeta = \frac{3-\mu}{2} = 1 - \frac{R_A}{2R_B}$$

Note: Cannot Make $\zeta > 1$

For $R_A = 0 \Rightarrow \zeta = 1 \Rightarrow$ Critically Damped

For $R_A < 2R_B \Rightarrow 0 < \zeta < 1 \Rightarrow$ Underdamped

For $R_A = 2R_B \Rightarrow \zeta = 0 \Rightarrow$ Oscillator

For $R_A > 2R_B \Rightarrow \zeta < 0 \Rightarrow$ Unstable

Rensselaer

SALLEN-KEY LOW PASS

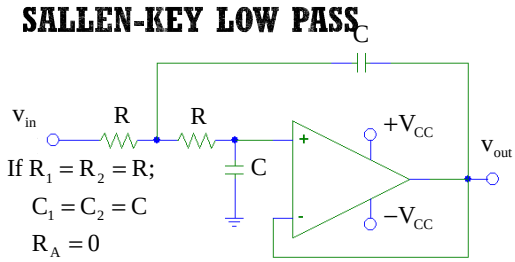

If $R_1 = R_2 = R;$

$C_1 = C_2 = C$

$R_A = 0$

$\zeta = 1$

Voltage Follower

$$H(s) = \frac{\omega_0^2}{(s+\omega_0)^2} \qquad K = 1 \qquad \omega_0 = \frac{1}{RC}$$

Rensselaer

LPF DESIGN

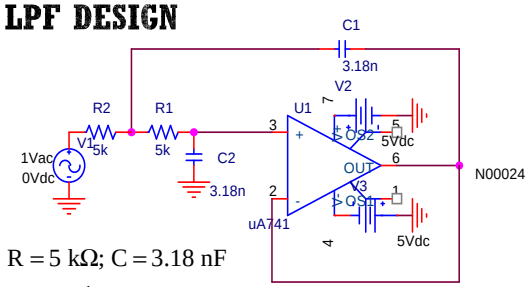

$R = 5\ k\Omega;\ C = 3.18\ nF$

$$f_0 = \frac{1}{2\pi RC} = 10\ kHz$$

LPF DESIGN

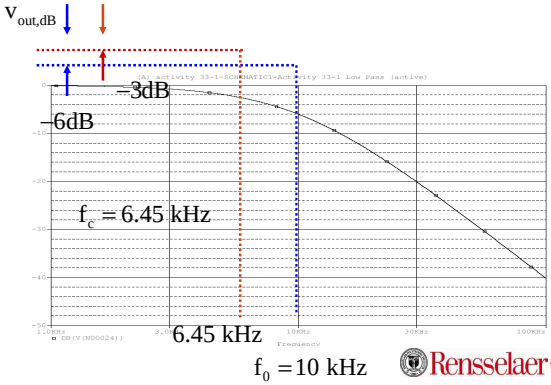

LPF DESIGN

θ

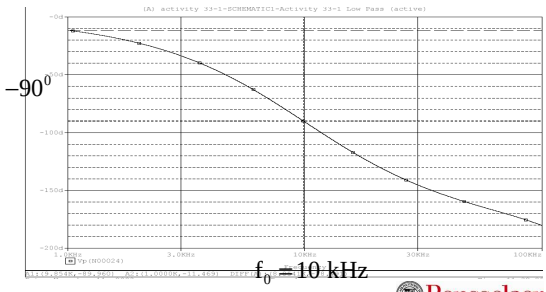

SALLEN-KEY LOW PASS

If Choose $R_1 = R_2 = R;\ C_1 = C_2 = C$

$$\omega_0 = \frac{1}{RC} \qquad \zeta = \frac{3-\mu}{2} = 1 - \frac{R_A}{2R_B}$$

Choose $\zeta = \frac{\sqrt{2}}{2} = .707$

$$R_A = .586 R_B$$

Choose $R_A = 5.86\ k\Omega;\ R_B = 10\ k\Omega$

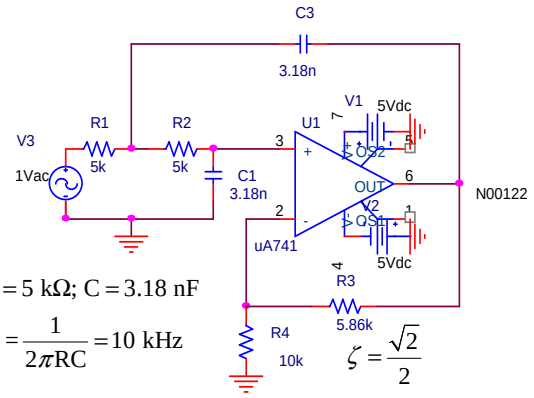

$R = 5\ k\Omega;\ C = 3.18\ nF$

$$f_0 = \frac{1}{2\pi RC} = 10\ kHz$$

$$\zeta = \frac{\sqrt{2}}{2}$$

Rensselaer

BUTTERWORTH LOW PASS

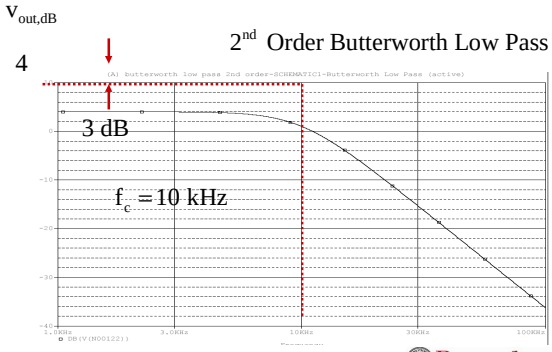

$f_0 = 10$ kHz

Rensselaer

BUTTERWORTH LOW PASS

$$H(s) = \frac{K\omega_0^2}{s^2 + 2\zeta\omega_0 s + \omega_0^2}$$

Choose $\zeta = \frac{\sqrt{2}}{2} = .707 < 1$

2nd Order Butterworth Low Pass Filter

Butterworth Filters are "Maximally Flat"

Rensselaer

BUTTERWORTH LOW PASS

$$H_{lp}(s)\Big|_{Butterworth} = K\frac{\omega_{co}^n}{B_n(s)}$$

$B_n(s) =$ Butterworth Polynomials

Find $B_n(s)$ from Tables

Makes $\frac{d|H|}{d\omega}, \frac{d^2|H|}{d\omega^2}, \ldots \frac{d^m|H|}{d\omega^m}\Big|_{\omega=0} = 0;\ m = 2n-1$

"Maximally Flat"

Rensselaer

BUTTERWORTH POLYNOMIALS

$B_1(s) = (s + \omega_c) \Rightarrow$ Simple RC Circuit

$B_2(s) = (s^2 + \sqrt{2}\omega_c s + \omega_c^2) \Rightarrow$ Use Sallen-Key

$B_3(s) = (s + \omega_c)(s^2 + \omega_c s + \omega_c^2) \Rightarrow$ Use $1^{st} + 2^{nd}$ Order

$B_4(s) = (s^2 + .7654\omega_c s + \omega_c^2)(s^2 + 1.848\omega_c s + \omega_c^2)$

$\Rightarrow$ Use Two 2nd Order Circuits

....etc.

Table 14-1 in Thomas and Rosa

Rensselaer

2ND ORDER LOW PASS

Another Choice is a Chebychev Low Pass Filter

Sharper "Roll-Off" than Butterworth Filters

Less "Flat" than Butterworth Filters

Sacrifice "Flatness" for "Roll-Off"

See Thomas and Rosa for Details

Rensselaer

SALLEN-KEY HIGH PASS

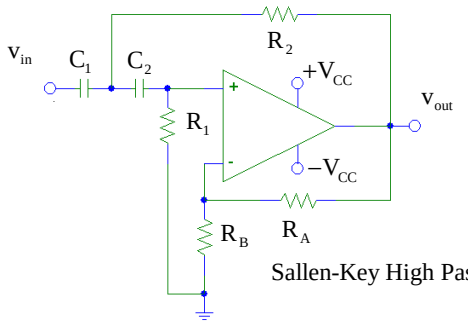

Sallen-Key High Pass

SALLEN-KEY HIGH PASS

$$H(s) = \frac{Ks^2}{s^2 + 2\zeta\omega_0 s + \omega_0^2}$$

$$K = \mu = 1 + \frac{R_A}{R_B} \qquad \omega_0 = \frac{1}{\sqrt{R_1C_1R_2C_2}}$$

$$2\zeta = \sqrt{\frac{R_2C_2}{R_1C_1}} + \sqrt{\frac{R_1C_2}{R_2C_1}} + (1-\mu)\sqrt{\frac{R_1C_1}{R_2C_2}}$$

2nd Order High Pass Filter

SALLEN-KEY HIGH PASS

If Choose $R_1 = R_2 = R;\ C_1 = C_2 = C$

$$\omega_0 = \frac{1}{RC} \qquad \zeta = \frac{3-\mu}{2} = 1 - \frac{R_A}{2R_B}$$

Note: Cannot Make $\zeta > 1$

For $R_A = 0 \Rightarrow \zeta = 1 \Rightarrow$ Critically Damped

For $R_A < 2R_B \Rightarrow 0 < \zeta < 1 \Rightarrow$ Underdamped

For $R_A = 2R_B \Rightarrow \zeta = 0 \Rightarrow$ Oscillator

For $R_A > 2R_B \Rightarrow \zeta < 0 \Rightarrow$ Unstable

SALLEN-KEY HIGH PASS

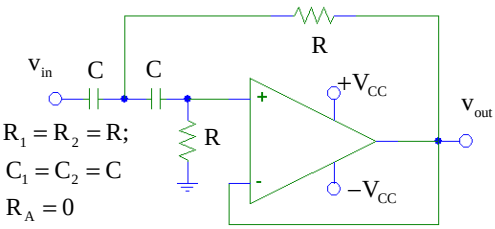

If $R_1 = R_2 = R;$

$C_1 = C_2 = C$

$R_A = 0$

$\zeta = 1$

$$H(s) = \frac{s^2}{(s+\omega_0)^2} \qquad K = 1 \qquad \omega_0 = \frac{1}{RC}$$

SALLEN-KEY HIGH PASS

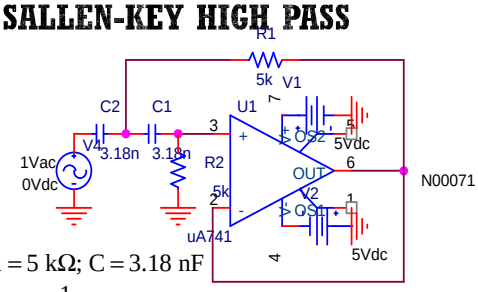

$R = 5\ k\Omega;\ C = 3.18\ nF$

$$f_0 = \frac{1}{2\pi RC} = 10\ kHz$$

SALLEN-KEY HIGH PASS

$V_{out,dB}$

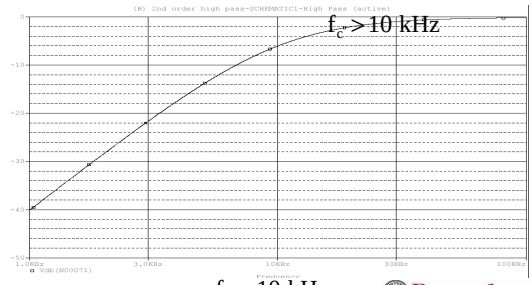

$f_0 = 10$ kHz

Rensselaer

BUTTERWORTH HIGH PASS

$$H(s) = \frac{Ks^2}{s^2 + 2\zeta\omega_0 s + \omega_0^2}$$

Choose $\zeta = \frac{\sqrt{2}}{2} = .707 < 1$

2nd Order Butterworth High Pass Filter

Butterworth Polynomials are the Same as for Low Pass Filters

Rensselaer

2ND ORDER HIGH PASS

Another Choice is a Chebychev High Pass Filter

Sharper "Roll-Off" than Butterworth Filters

Less "Flat" than Butterworth Filters

Sacrifice "Flatness" for "Roll-Off"

See Thomas and Rosa for Details

Rensselaer