1) Equivalent Circuits/Circuit Reduction

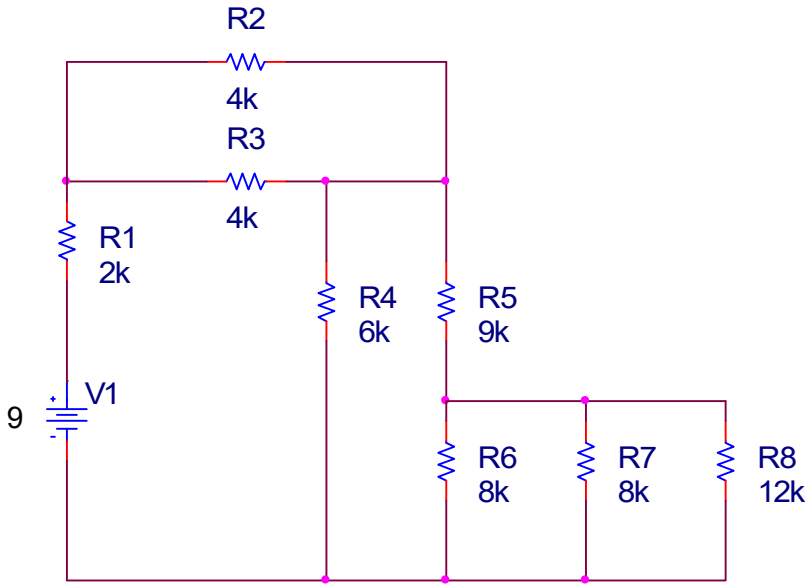

In the above circuit determine:

a. The equivalent resisance seen by the voltage source.

b. Find the current through the voltage source.

c. Find the current through resistor R8.

2) Equivalent Circuit

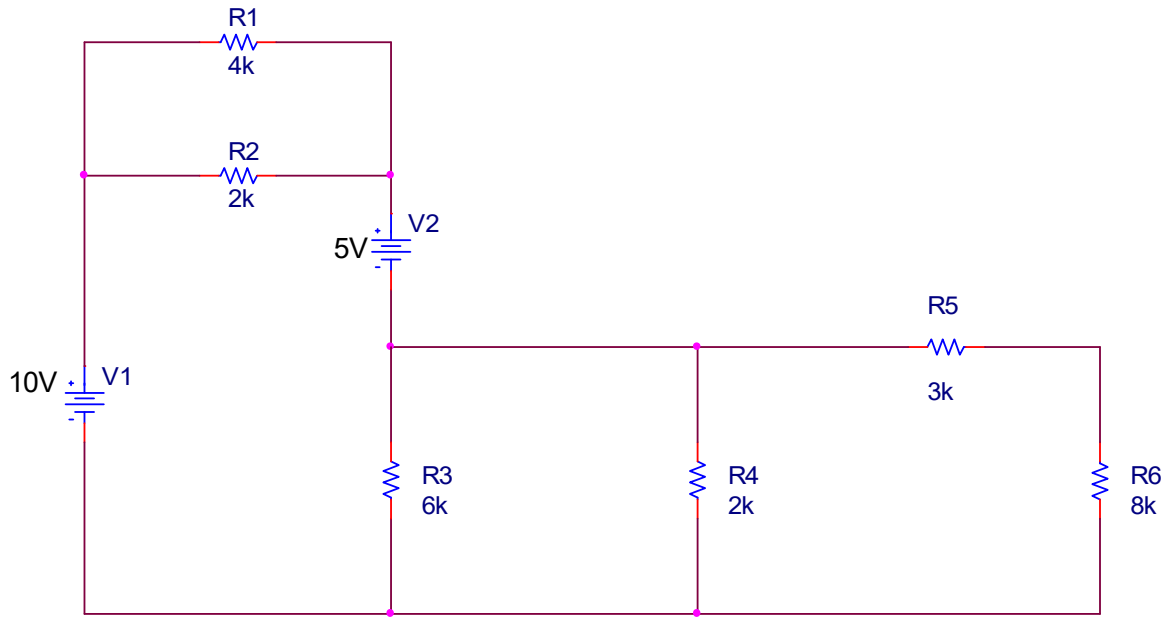

In the above circuit determine:

a. An equivalent source (a single voltage source)

b. The equivalent resistance seen by the combined voltage source

c. The current through the voltage souce, V1

d. The current through the resistor R6

3) Node/Mesh Analysis

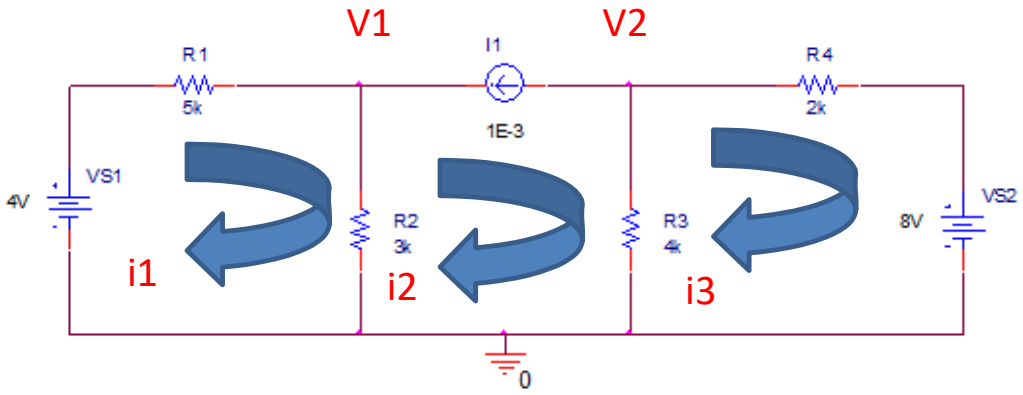

a. Apply node analysis to determine V1 and V2

b. Apply mesh analysis to determine i1, i2, and i3

4) Superposition

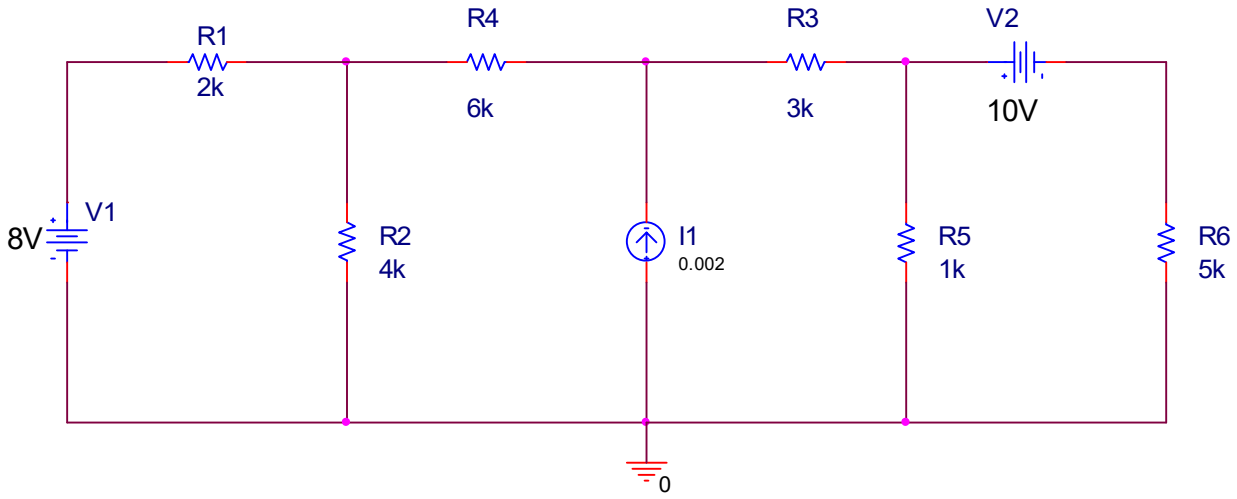

a. Use any method to determine the voltage across R2 (node, mesh, circuit reduction, source transformation...)

b. Find VR2 using superposition. *(For each source, draw the schematic).*