1) Dependent Voltage Sources

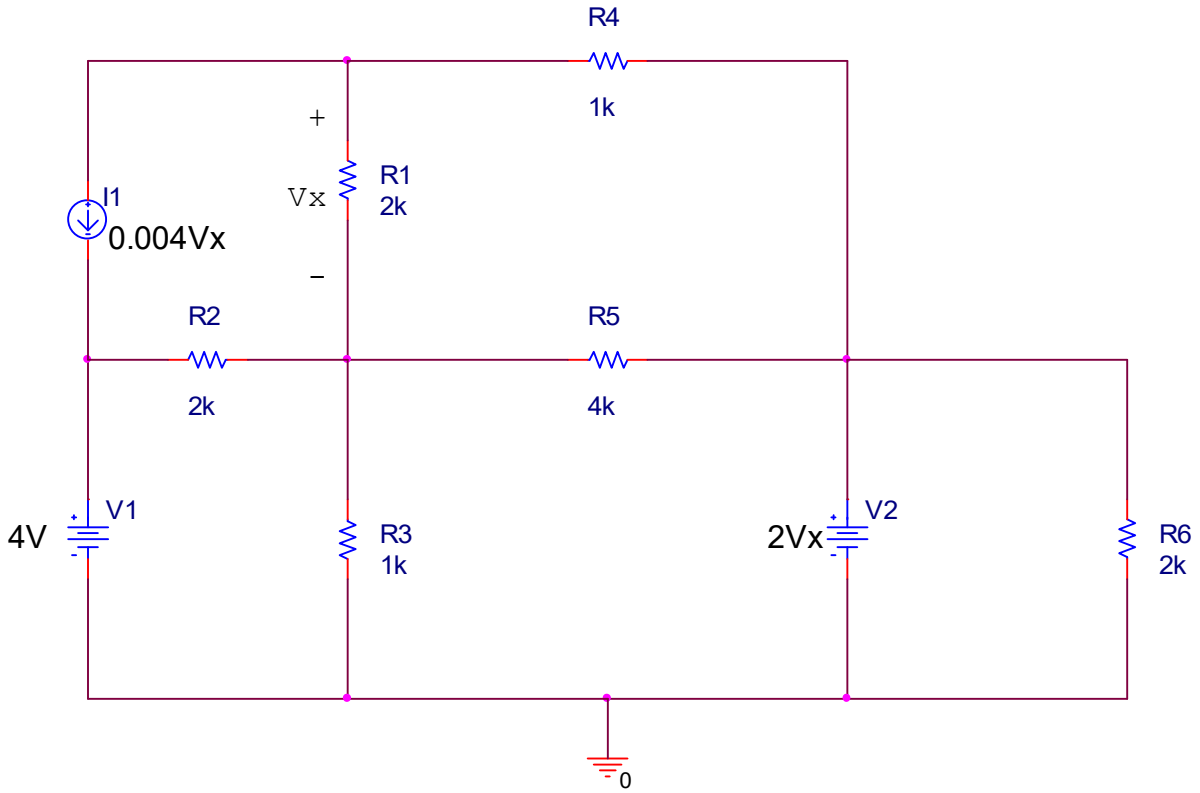

In the circuit above, set up the linear system to analyze the circuit using both mesh and node analysis. You only need to solve for Vx using one of the methods. Be sure to include the following:

a) Label the nodes you would use to perform node analysis.
b) Clearly write linear system of equations for nodal analysis.
c) Clearly write linear system of equation for mesh analysis.
d) Find Vx using either method.

2) Thevenin/Norton Voltage

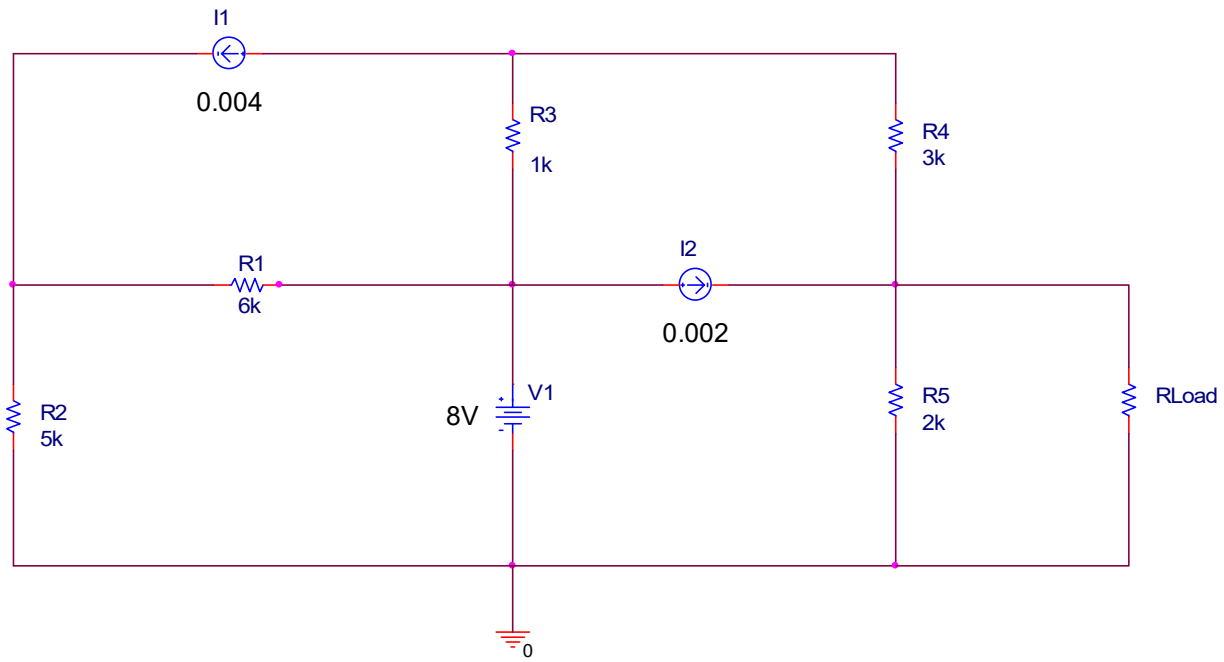

On the above circuit, using any method, find the a) thevenin voltage, b) thevenin resistance, and c) norton current. Draw the schematics of the norton and thevenin circuits for full credit. Confirm your values by any method.

3) Thevenin/Norton Voltage

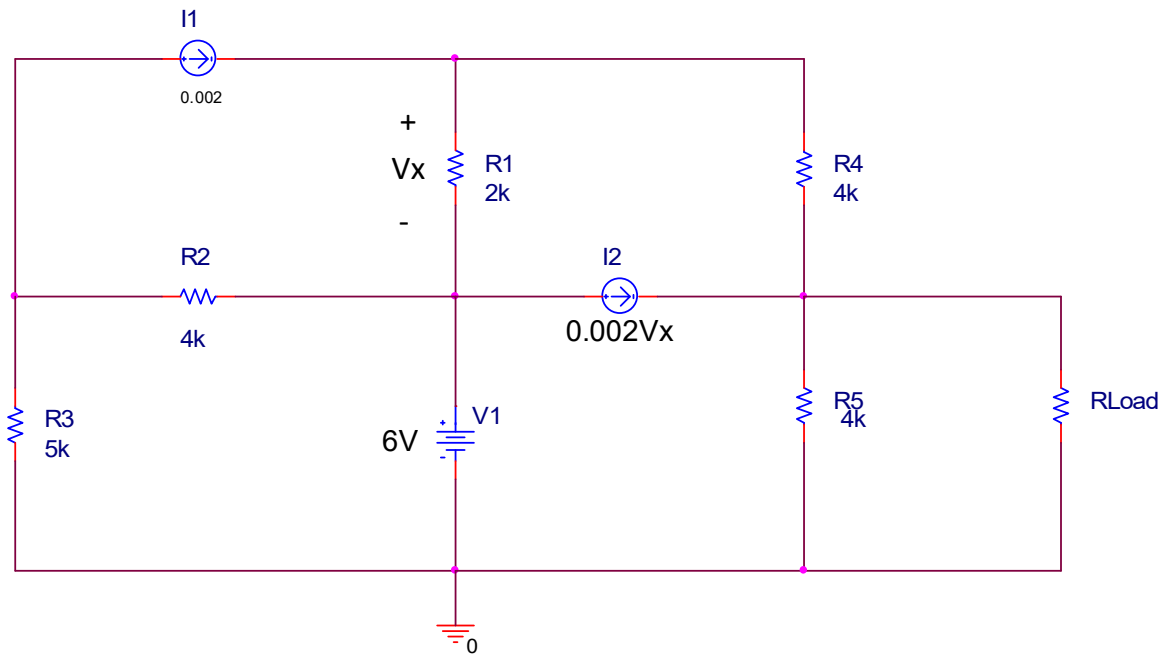

a) Determine VTH using any analysis method, IN using any analysis method, and RTH using the test method for the above circuit. Verify your answers.

4) Amplifier Circuits

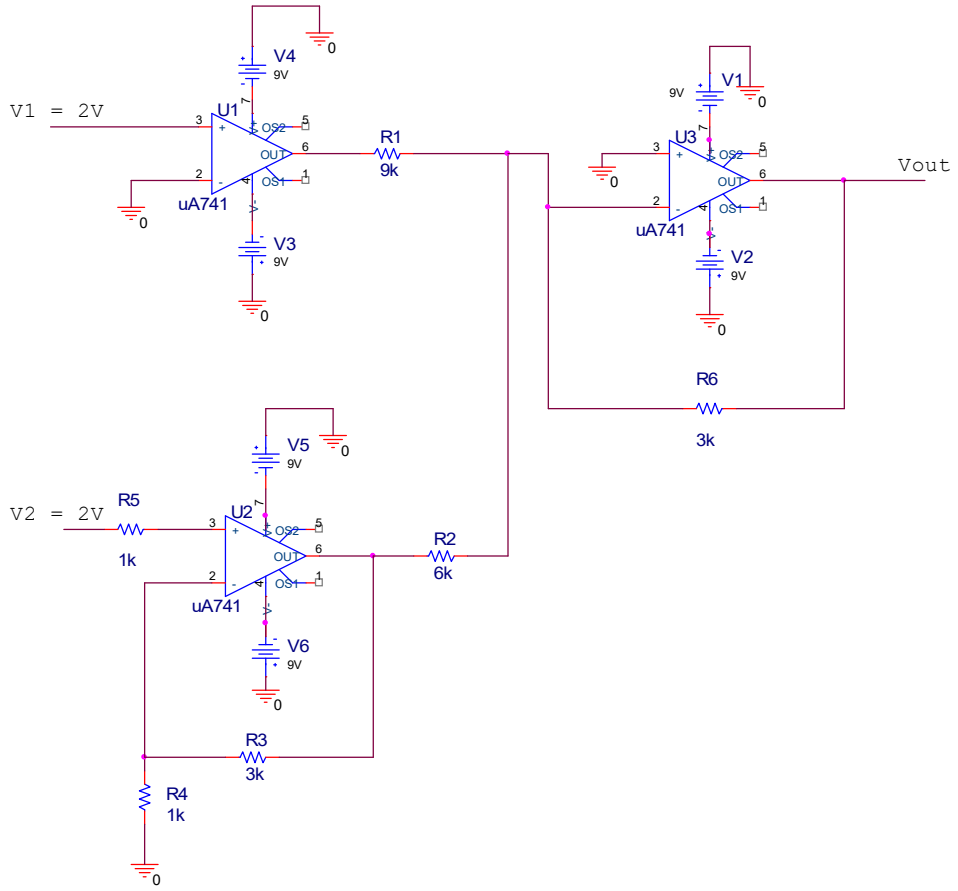

a) Find the output voltage, Vout. The voltages to power the op-amps are 9V and -9V.

5) Amplifier Circuits - Designing problem

a) Design a two stage amplifier such that the output of the first stage is V1 = 5*Vin and the output of the second stage is V2 = -V1.