Circuits

Exam 1

Spring 2020

1.	/25
2.	/25
3.	/30
4.	/15
Extra Credit	/5
Extra Credit	/5
Total	/100

Name _____

Notes:

1) One crib sheet will be handed out to you.
2) Calculators are okay as long as they don't have a wireless.

1) Short Answer (25 pts)

1.1: ***10 pts*** Using ***KCL and KVL***, derive the current divider equation for I_{R1}. ***(Yes, you must do it both ways!!)***

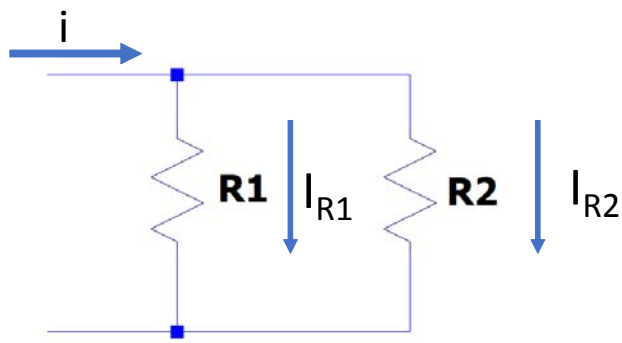

$$I_{R1} = \frac{R_2}{R_2 + R_1} \cdot i$$

Using KCL

$$-i + I_{R1} + I_{R2} = 0$$

$$I_{R1} = i - I_{R2}$$

$$I_{R1} = i - \frac{i \cdot \frac{R_1 \cdot R_2}{R_1 + R_2}}{R_2}$$

$$I_{R1} = i\left(1 - \frac{R_1}{R_1 + R_2}\right)$$

$$I_{R1} = i \cdot \left(\frac{R_1 + R_2}{R_1 + R_2} - \frac{R_1}{R_1 + R_2}\right)$$

$$I_{R1} = i \cdot \frac{\left(R_1 + R_2 - R_1\right)}{R_1 + R_2}$$

$$I_{R1} = i \cdot \left(\frac{R_2}{R_1 + R_2}\right)$$

$$V = i \cdot \frac{R_1 \cdot R_2}{R_1 + R_2}$$

Using KVL

$$-V_{R1} + V_{R2} = 0$$

$$-I_{R1} \cdot R_1 + \frac{V}{R_2} = 0$$

$$-I_{R1} \cdot R_1 + i \cdot \frac{R_1 \cdot R_2}{R_1 + R_2} = 0$$

$$I_{R1} = i \cdot \frac{R_1 \cdot R_2}{\left(R_1 + R_2\right) \cdot R_1}$$

$$I_{R1} = \frac{i \cdot R_2}{R_1 + R_2}$$

1.2: ***15 pts*** Superposition and Circuit Reduction
Find the value of the current source I_1 if I_{R3}=9mA **<u>using superposition</u>** and circuit reduction techniques.

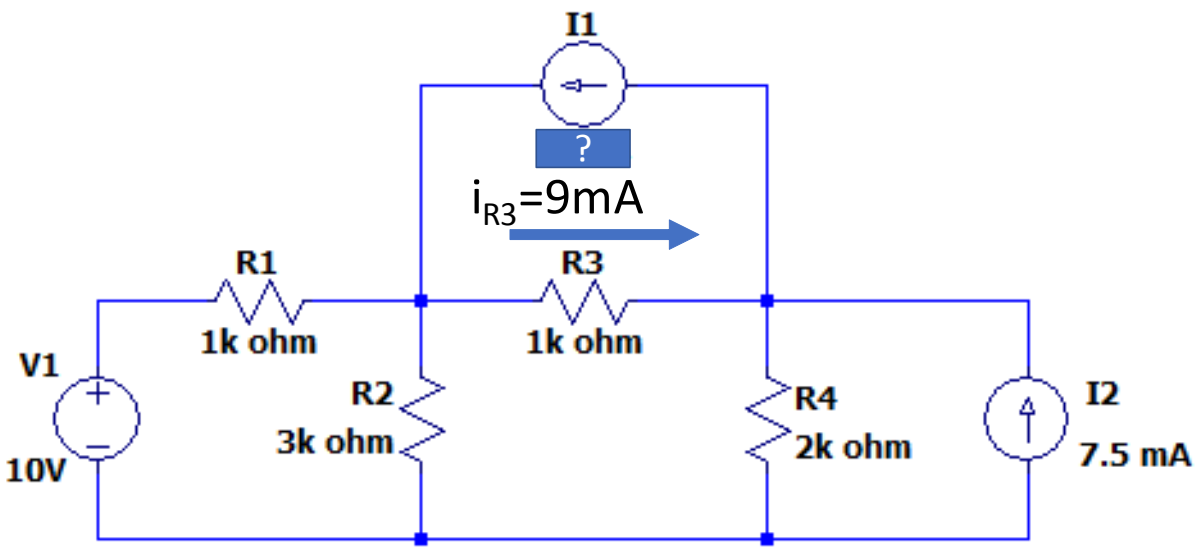

$V_{1a} := 10V \quad R_{1a} := 1k\Omega \quad R_{2a} := 3k\Omega \quad R_{3a} := 1k\Omega \quad R_{4a} := 2k\Omega \quad I_{2a} := 7.5mA$

<u>For V1:</u>

Open I1 and I2
Double voltage divider then ohm's law

$$R_{34a} := R_{3a} + R_{4a} = 3 \times 10^3 \Omega$$

$$R_{234a} := \frac{R_{2a} \cdot R_{34a}}{R_{2a} + R_{34a}} = 1.5 \times 10^3 \Omega$$

$$V_{R234a} := V_{1a} \cdot \frac{R_{234a}}{R_{1a} + R_{234a}} = 6V$$

$$V_{R3V1} := V_{R234a} \cdot \frac{R_{3a}}{R_{3a} + R_{4a}} = 2V$$

$$i_{R3V1a} := \frac{V_{R3V1}}{R_{3a}} = 2 \cdot mA$$

More space on the next page!

For I2:

Short V1 and Open I1

Source conversion then voltage divider is one approach

$$V_{I2} := I_{2a} \cdot R_{4a} = 15\,V$$

$$R_{12a} := \frac{R_{1a} \cdot R_{2a}}{R_{1a} + R_{2a}} = 750\,\Omega$$

$$V_{R3I2} := \frac{R_{3a} \cdot V_{I2}}{R_{12a} + R_{3a} + R_{4a}} = 4\,V$$

$$i_{R3I2} := \frac{-V_{R3I2}}{R_{3a}} = -4 \cdot mA$$

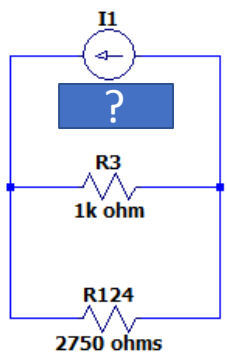

$$i_{R3tot} := 9mA$$

$$i_{R3I1} := i_{R3tot} - i_{R3V1a} - i_{R3I2} = 11 \cdot mA$$

$$R_{124a} := R_{12a} + R_{4a} = 2.75 \times 10^{3}\,\Omega$$

$$i_{R3I1} = I_1 \cdot \frac{R_{124a}}{R_{124a} + R_{3a}}$$

$$I_1 := \frac{i_{R3I1}}{\frac{R_{124a}}{R_{124a} + R_{3a}}} = 15 \cdot mA$$

I_1	(A or mA)

2) Nose/Mesh Analysis (25 points)

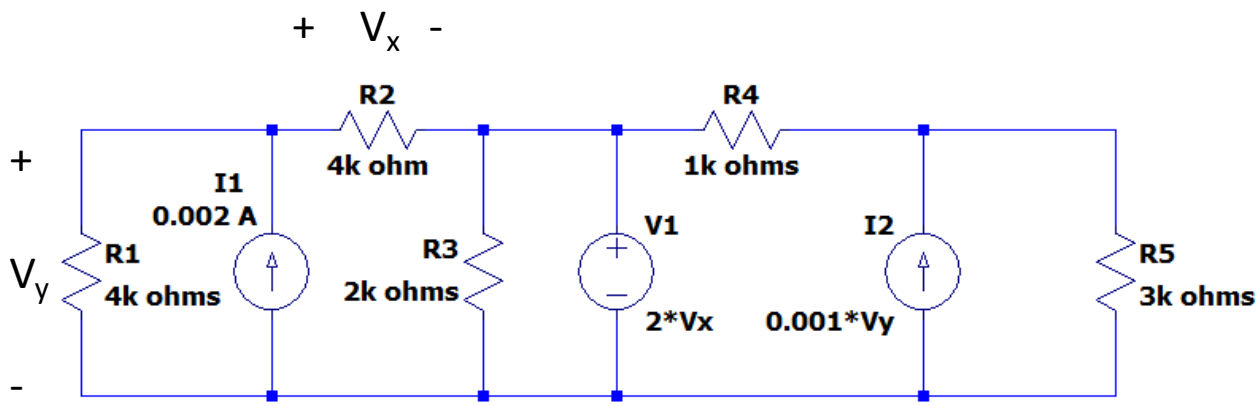

2.1: ***20 pts*** Use any method to determine the voltage across R4.

Students don't have to calculate the number of equations needed for node or mesh but it would help them save time.

Node KCL equations	$4 - 1 - 1 = 2$	could use Vy as node then also have dependent source def for 3 equ. total
Mesh KVL equations	$5 - 2 = 3$	need to define 2 supermesh definitions, Vy and Vx for 7 equ. total

<u>Nodal (is easiest)</u>

KCL at node Vy:

$$\frac{V_y}{R_1} - I_1 + \frac{V_y - 2V_x}{R_2} = 0$$

$$V_y \cdot \left(\frac{1}{4k} + \frac{1}{4k}\right) - V_x \cdot \frac{2}{4k} = 0.002$$

KCL at node above I2 (called it Va)

$$\frac{V_A - 2 \cdot V_x}{R_4} - 0.001V_y + \frac{V_A}{R_5} = 0$$

$$V_y \cdot -0.001 - V_x\left(\frac{2}{1k}\right) + V_A \cdot \left(\frac{1}{1k} + \frac{1}{3k}\right) = 0$$

Dependent source definition

$$V_x = V_y - 2 \cdot V_x$$

$$V_y - 3 \cdot V_x = 0$$

V_{R4}	(V)

$$M := \begin{bmatrix} \left(\frac{1}{4000}+\frac{1}{4000}\right) & \frac{-2}{4000} & 0 \\ -0.001 & \frac{-2}{1000} & \left(\frac{1}{1000}+\frac{1}{3000}\right) \\ 1 & -3 & 0 \end{bmatrix} \qquad C_1 := \begin{pmatrix} 0.002 \\ 0 \\ 0 \end{pmatrix}$$

$$M^{-1}C_1 = \begin{pmatrix} 6 \\ 2 \\ 7.5 \end{pmatrix} \begin{matrix} Vy \\ Vx \\ VA \end{matrix} \qquad V_{R4} := 2\cdot 2 - 7.5 = -3.5 \quad V$$

<u>Mesh (so you like to do things the hard way...ok!)</u>

KVL on supermesh 1 and 2

$$i_1\cdot R_1 + i_2\cdot R_2 + \left(i_2 - i_3\right)\cdot R_3 = 0$$

$$i_1\cdot 4k + i_2\cdot 4k + \left(i_2 - i_3\right)\cdot 2k = 0$$

(1) $i_1\cdot 4k + i_2\cdot 6k - i_3\cdot 2k = 0$

KVL on loop 3

$$\left(i_3 - i_2\right)\cdot R_3 + 2\cdot V_x = 0$$

(2) $-i_2\cdot 2k + i_3\cdot 2k + 2\cdot V_x = 0$

KVL on supermesh 4 and 5

$$-2\cdot V_x + i_4\cdot R_4 + i_5\cdot R_5 = 0$$

(3) $i_4\cdot 1k + i_5\cdot 3k - 2\cdot V_x = 0$

$$M_1 := \begin{pmatrix} 4000 & 6000 & -2000 & 0 & 0 & 0 & 0 \\ 0 & -2000 & 2000 & 0 & 0 & 2 & 0 \\ 0 & 0 & 0 & 1000 & 3000 & -2 & 0 \\ -1 & 1 & 0 & 0 & 0 & 0 & 0 \\ 0 & 0 & 0 & -1 & 1 & 0 & -0.001 \\ 0 & -4000 & 0 & 0 & 0 & 1 & 0 \\ 4000 & 0 & 0 & 0 & 0 & 0 & 1 \end{pmatrix}$$

source definition I1

$$i_2 - i_1 = 0.002$$

(4) $-i_1 + i_2 = 0.002$

source definition I2

$$i_5 - i_4 = 0.001\cdot V_y$$

(5) $-i_4 + i_5 - 0.001V_y$

dependent source

$V_x = i_2 \cdot 4k$

(6) $-i_2 \cdot 4k + V_x = 0$

dependent source

(7) $V_y = -i_1 \cdot 4k$

$i_1 \cdot 4k + V_y = 0$

$$C_2 := \begin{pmatrix} 0 \\ 0 \\ 0 \\ 0.002 \\ 0 \\ 0 \\ 0 \end{pmatrix}$$

$$M_1^{-1} \cdot C_2 = \begin{pmatrix} -1.5 \times 10^{-3} \\ 5 \times 10^{-4} \\ -1.5 \times 10^{-3} \\ -3.5 \times 10^{-3} \\ 2.5 \times 10^{-3} \\ 2 \\ 6 \end{pmatrix} \begin{matrix} i_1 \\ i_2 \\ i_3 \\ i_4 \\ i_5 \\ V_x \\ V_y \end{matrix}$$

$V_{R4b} := -3.5 \cdot 10^{-3} \cdot 1000 = -3.5$ V

Conceptual questions

2.2: ***2.5 pts*** If ground was placed at the node above I_2 would your number of TOTAL NODAL equations needed (KCL, dependent source definitions, supernode definitons) to solve the problem increase, decrease, or stay the same? ***Draw the circuit to help describe why this is the case. Be sure to describe why you gave your answer.***

increase you now need a supernode equation
you also need more dependent source defintions

2.3: ***2.5 pts*** If ground was placed at the node above I_2 would your number of TOTAL MESH equations needed (KVL, dependent source definitions, supermesh definitons) to solve the problem increase, decrease, or stay the same? ***Draw the circuit to help describe why this is the case. Be sure to describe exactly why you gave your answer.***

Stay the same

3) Thevenin Dependent Circuits (30 pts)

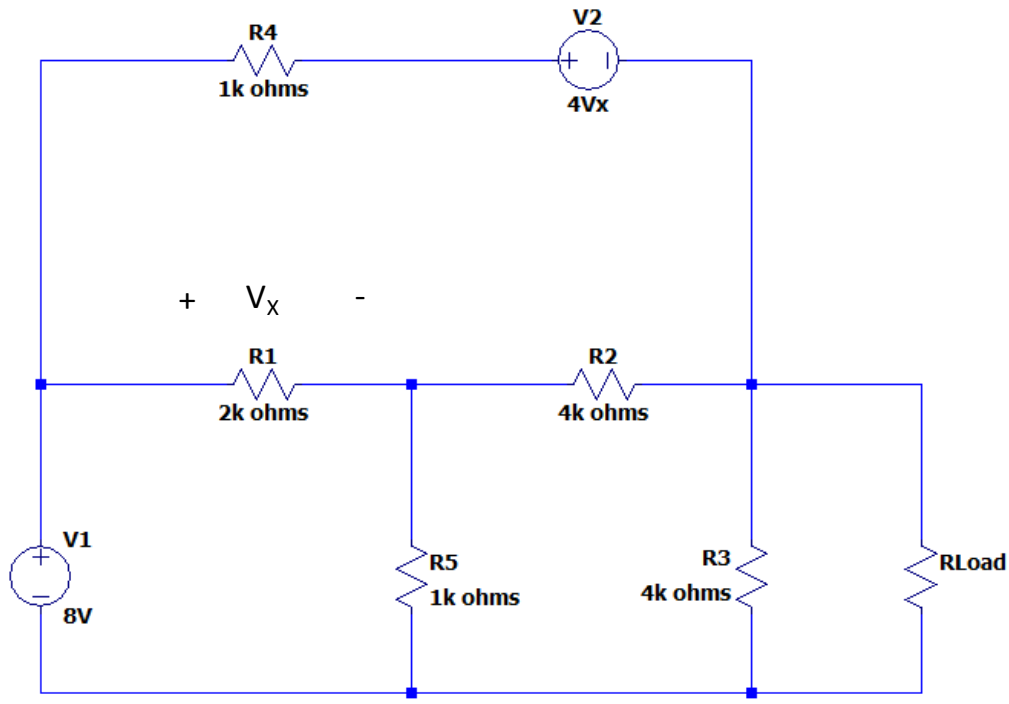

3.1: ***10 pts*** Find V_{TH} using the Open Circuit method.

Take of the load. Can use any analysis. I used mesh.

loop i1 (top)

$$i_1 \cdot R_4 + 4 \cdot V_x + (i_1 - i_3) \cdot R_2 + (i_1 - i_2) \cdot R_1 = 0$$

(1) $$i_1 \cdot 7k - i_2 \cdot 2k - i_3 \cdot 4k + 4V_x = 0$$

loop i2 (bottom left)

$$-8 + (i_2 - i_1) \cdot R_1 + (i_2 - i_3) \cdot R_5 = 0$$

(2) $$-i_1 \cdot 2k + i_2 \cdot 3k - i_3 \cdot 1k = 8$$

V_{Th}	(V)

loop i3 (bottom right)

$$(i_3 - i_2) \cdot R_5 + (i_3 - i_1) \cdot R_2 + i_3 \cdot R_3 = 0$$

(3) $$-i_1 \cdot 4k - i_2 \cdot 1k + i_3 \cdot 9k = 0$$

dependent source

$$\left(i_2 - i_1\right)\cdot R_1 = V_x$$

(4) $$-i_1\cdot 2k + i_2\cdot 2k - V_x = 0$$

$$M_2 := \begin{pmatrix} 7000 & -2000 & -4000 & 4 \\ -2000 & 3000 & -1000 & 0 \\ -4000 & -1000 & 9000 & 0 \\ -2000 & 2000 & 0 & -1 \end{pmatrix} \qquad C_3 := \begin{pmatrix} 0 \\ 8 \\ 0 \\ 0 \end{pmatrix}$$

$$M_2^{-1}\cdot C_3 = \begin{pmatrix} -8\times 10^{-3} \\ -4\times 10^{-3} \\ -4\times 10^{-3} \\ 8 \end{pmatrix} \qquad i_3 := -4mA$$

$$V_{Th} := i_3\cdot 4000\Omega = -16\,V$$

3.2: ***6 pts*** Find INorton uisng short circuit current (Isc).

R3 gets shorted but teh rest of the equations are the same

$$M_2 := \begin{pmatrix} 7000 & -2000 & -4000 & 4 \\ -2000 & 3000 & -1000 & 0 \\ -4000 & -1000 & 5000 & 0 \\ -2000 & 2000 & 0 & -1 \end{pmatrix} \qquad C_3 := \begin{pmatrix} 0 \\ 8 \\ 0 \\ 0 \end{pmatrix}$$

$$M_2^{-1}\cdot C_3 = \begin{pmatrix} -0.015 \\ -0.012 \\ -0.014 \\ 5.714 \end{pmatrix} \qquad I_N := -14mA$$

I_N	(ohms)

3.3. ***6 pts*** Find Rth using the Test Method.

Same equation as Vth for loop 1 and loop 2 without 8 except now with i4

loop i3

$$\left(i_3 - i_2\right)\cdot R_5 + \left(i_3 - i_1\right)\cdot R_2 + \left(i_3 - i_4\right)\cdot R_3 = 0$$

$$(3) \quad -i_1\cdot 4k - i_2\cdot 1k + i_3\cdot 9k - i_4\cdot 4k = 0$$

$$M_3 := \begin{pmatrix} 7000 & -2000 & -4000 & 0 & 4 \\ -2000 & 3000 & -1000 & 0 & 0 \\ -4000 & -1000 & 9000 & -4000 & 0 \\ 0 & 0 & -4000 & 4000 & 0 \\ -2000 & 2000 & 0 & 0 & -1 \end{pmatrix}$$

loop i4

$$\left(i_4 - i_3\right)\cdot R_3 + 1 = 0$$

$$-i_3\cdot 4k + i_4\cdot 4k = -1$$

$$C_4 := \begin{pmatrix} 0 \\ 0 \\ 0 \\ -1 \\ 0 \end{pmatrix}$$

$$M_3^{-1}\cdot C_4 = \begin{pmatrix} -4.286\times 10^{-4} \\ -5\times 10^{-4} \\ -6.429\times 10^{-4} \\ -8.929\times 10^{-4} \\ -0.143 \end{pmatrix}$$

$$\frac{1}{-8.929\times 10^{-4}} = -1.12\times 10^{3}$$

R_{Th}	(Ω)

3.4: 2 **pts** Verify your answers from 3.1-3:3. (Prove they are correct).

$$\frac{-16\text{V}}{-14\text{mA}} = 1.143 \times 10^3 \Omega$$

close rounding errors

$$\frac{V_{TH}}{I_N} = R_{TH}$$

4) Cascading Multi-stage Op Amp Circuits and Design Concepts (15 pts)

4.1: ***5 pts*** You are given +/- 10V supplies. Design a circuit that switches to 10V when below 0V and -10V when above 0V. Label all inputs to you op amp including power supplies.

inverting zero crossing comparator

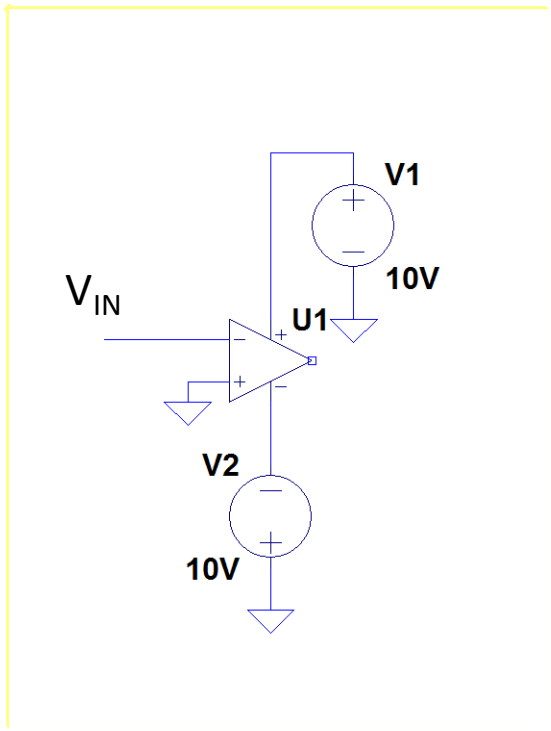

4.2: ***10 pts*** Determine the output voltage, Vout. The power to the op amps are 9V and -9V but aren't shown to make the circuit easier to read.

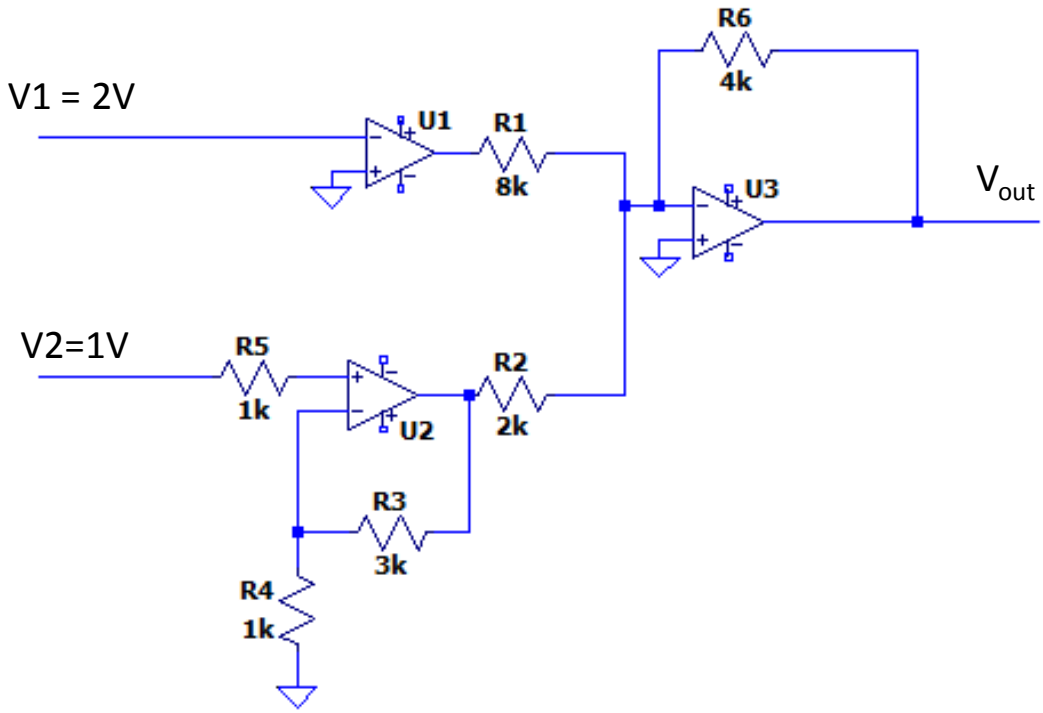

U1 Comparator V- > V+ so -9V

U2 non inverting amplifier

$$V_{out} := 1 \cdot \left(1 + \frac{3000}{1000}\right) = 4$$

U3 summing inverting amplifier

$$V_{outfinal} := \frac{-4000}{8000} \cdot -9 + \left(\frac{-4000}{2000}\right) \cdot 4 = -3.5$$

V_{out}	(V)

4.3: ***5 pts*** EXTRA CREDIT: Write detailed steps on how to derive/prove Thevein's Theorem for a circuit with many resistors and multiple sources. You do not have to do the full analysis, just major steps. **Yes, this was posted to Piazza with 70 views!!!**

Goal trying to find the current and voltage characteristic that the load sees.

1. Remove load
2. Superpoistion: Do multiple sub circuits with each source (turn off all other sources)
3. For each sub circuit find v in terms of i at the place where the load was
4. Need to add external current source to get resistance for the circuit…i=Iext
    - 4a. find Req
    - 4b. VIext = -i*Req=-Iext*Req
4. Sum all with superposition

Any reasonable combination of at least 2. and 4., and some equation that links the goal of current voltage characteristic with thevenin.

$$v = v_{oc} - I_{ext} \cdot R_{eq}$$